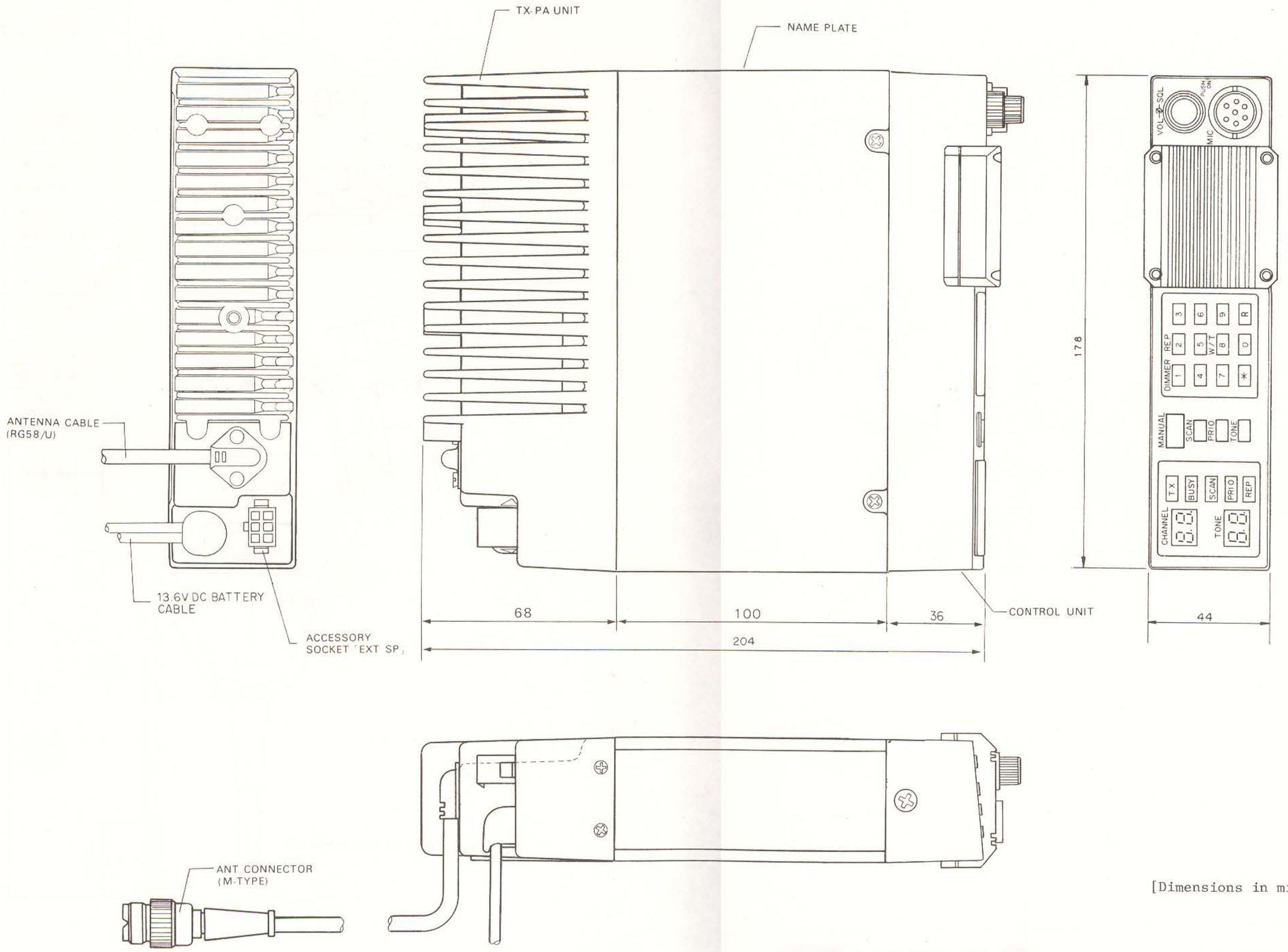

[Dimensions in millimeters]

OUTLINE DRAWING

No.	NAME
1	PTT KNOB
2	GRILLE
3	———
4	ATTACHMENT
5	FRONT CASE
6	COILED CABLE
7	BUSHING
8	SCREW
9	HANGER KNOB
10	REAR CASE
11	SWITCH KNOB
12	NAME PLATE
13	———
14	SWITCH BUTTON
15	NAME PLATE
16	CONNECTOR

No.	NAME	PART No.	SET
1	HANGER	14-11-64-01	1
2	SCREW	99-40-0204-1214	3
3	WASHER	99-47-1104-23	3
4	VINYL BAG	14-56-10-00	1

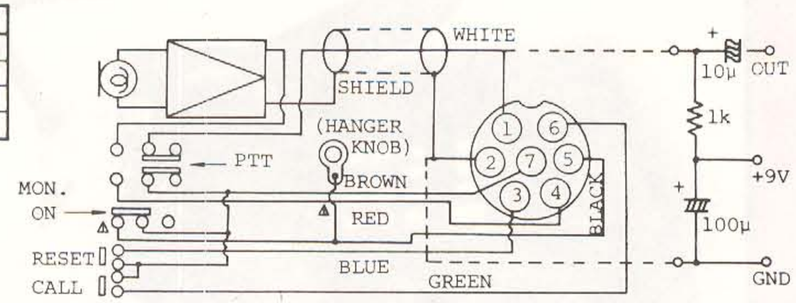

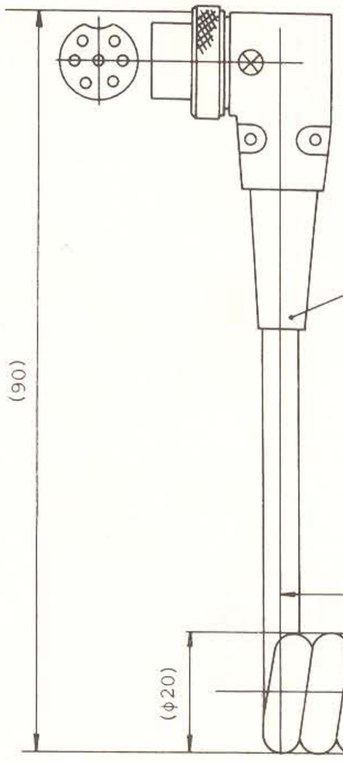

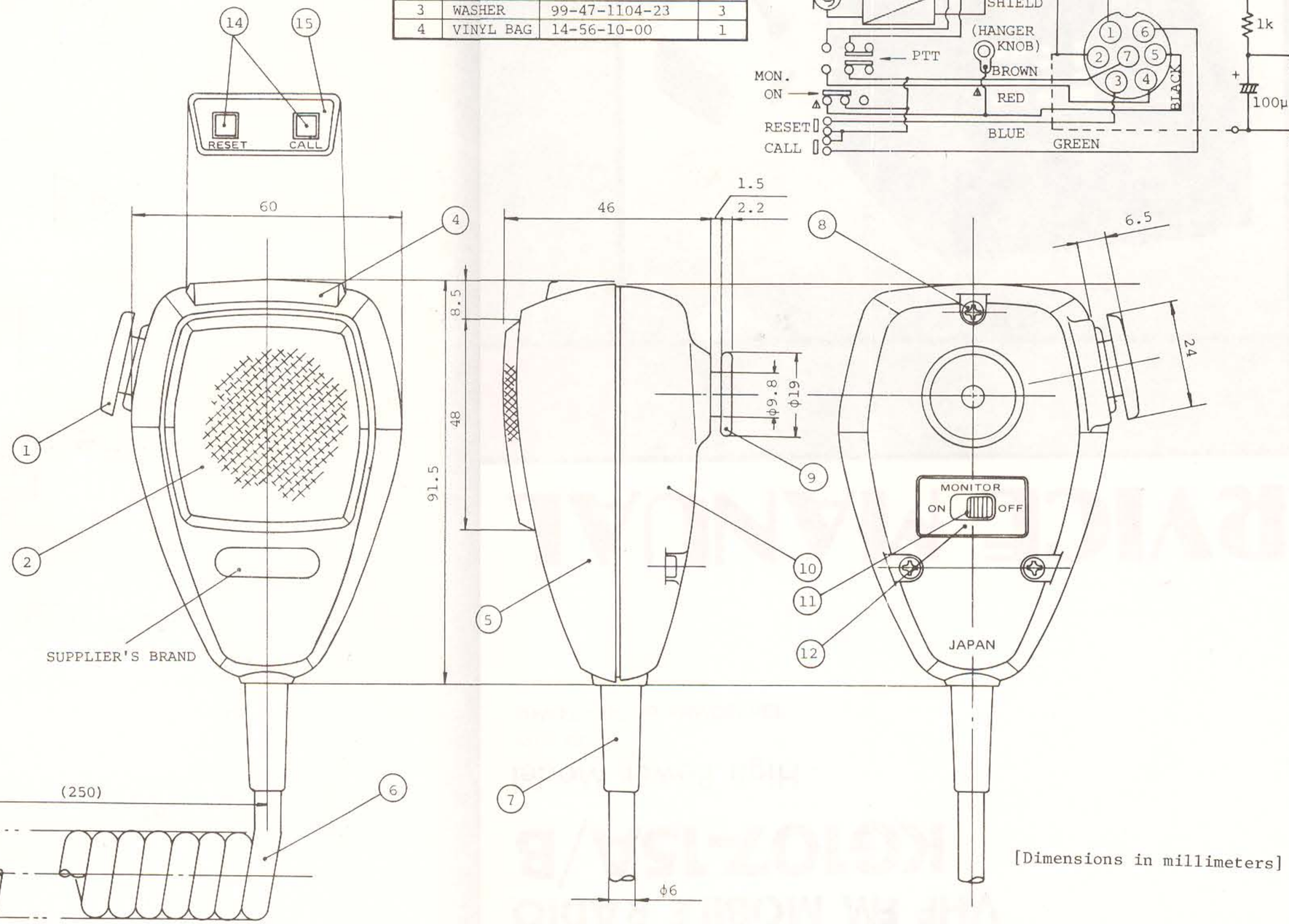

[Dimensions in millimeters]

KD-357M MICROPHONE'S DRAWING

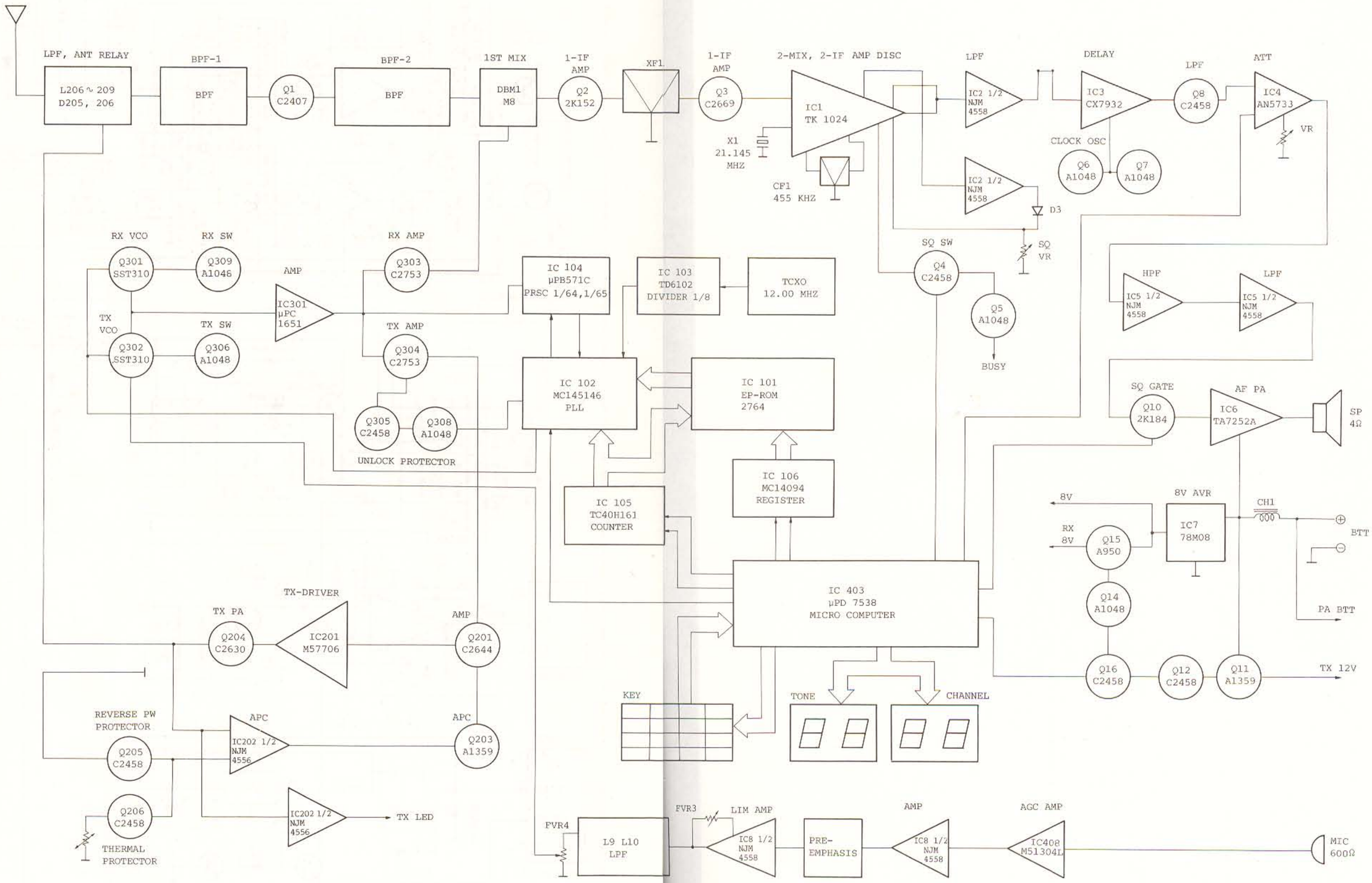

BLOCK DIAGRAM
KG107 (136-174 MHz, 20-40W)

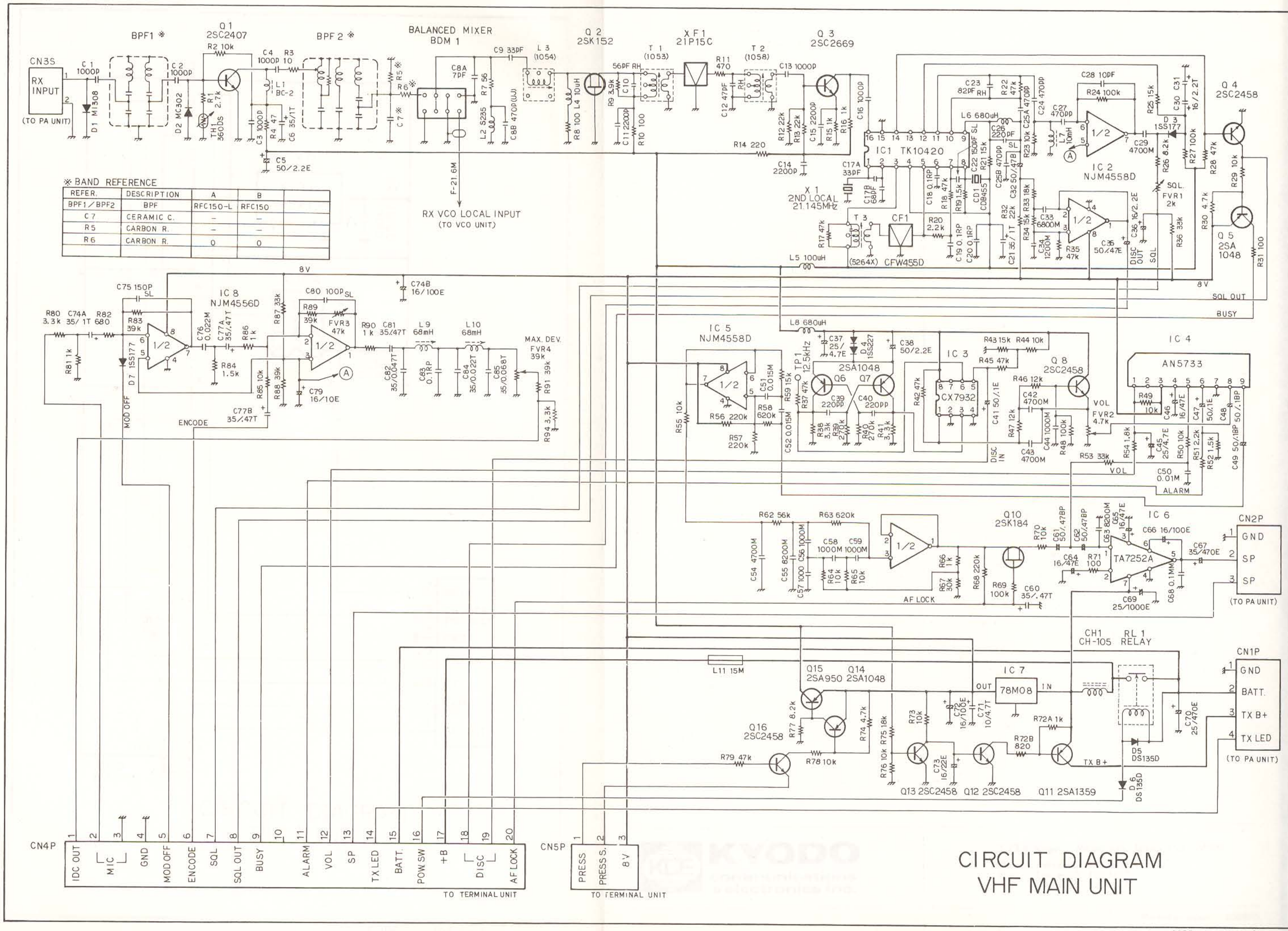

CIRCUIT DIAGRAM
VHF MAIN UNIT

CODE : 107VMAIN-2

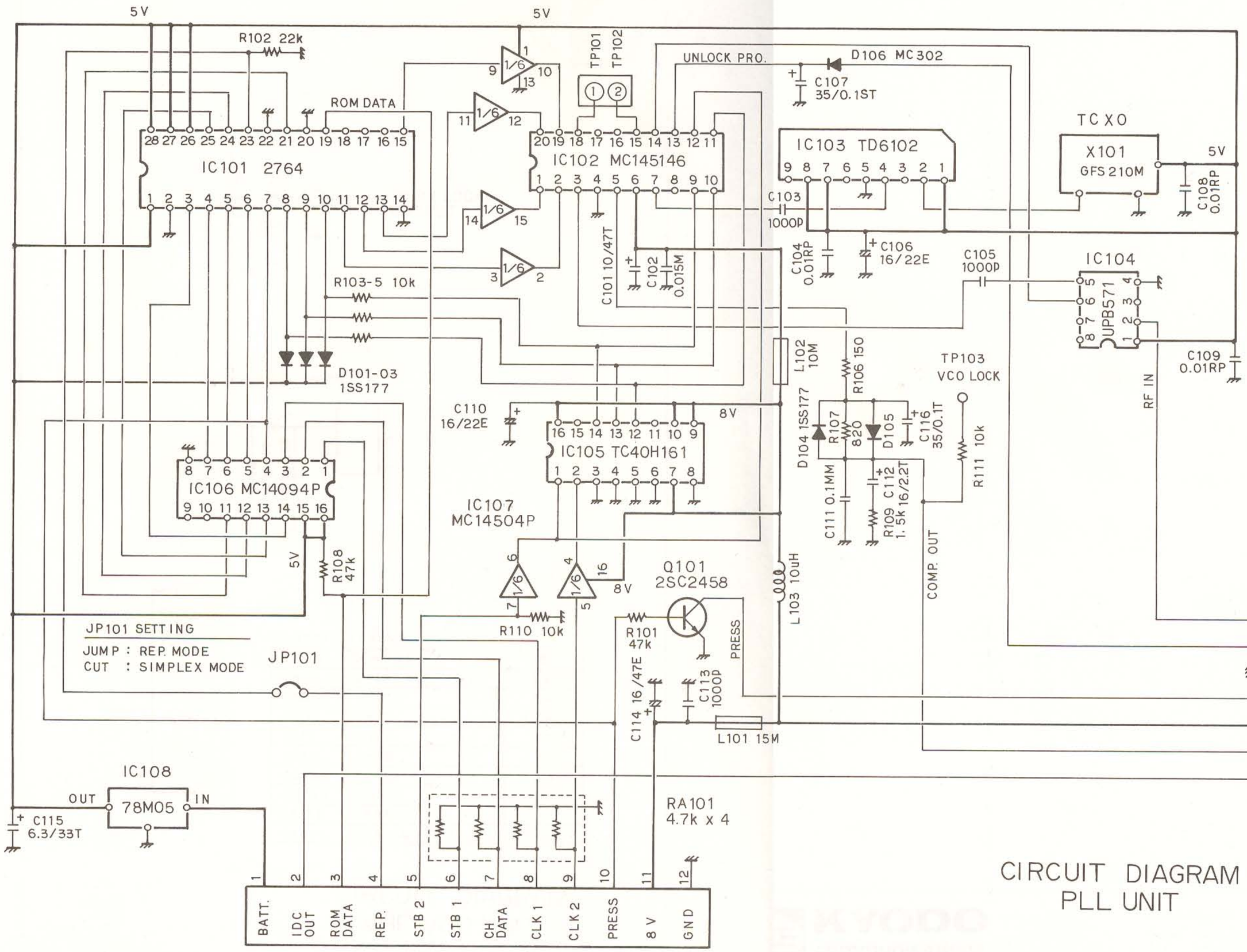

CIRCUIT DIAGRAM
PLL UNIT

CODE : 107PL-2

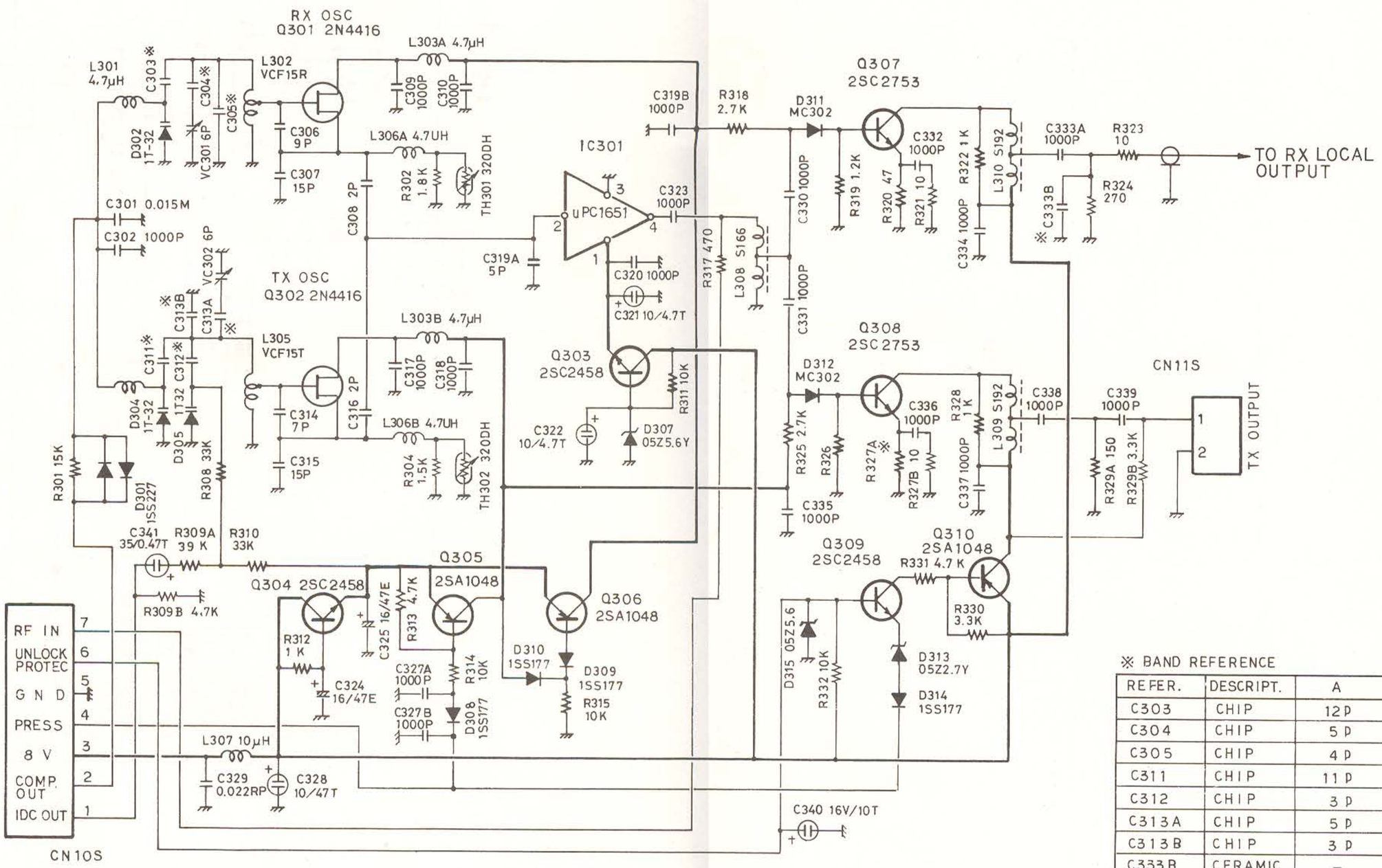

※ BAND REFERENCE

REFER.	DESCRIPT.	A	B
C303	CHIP	12 p	9 p
C304	CHIP	5 p	3 p
C305	CHIP	4 p	2 p
C311	CHIP	11 p	9 p
C312	CHIP	3 p	2.5 p
C313A	CHIP	5 p	2 p
C313B	CHIP	3 p	1 p
C333B	CERAMIC	—	—
R327A	CARBON	100	100

CIRCUIT DIAGRAM
VHF VCO UNIT

CODE 07VVCO-1

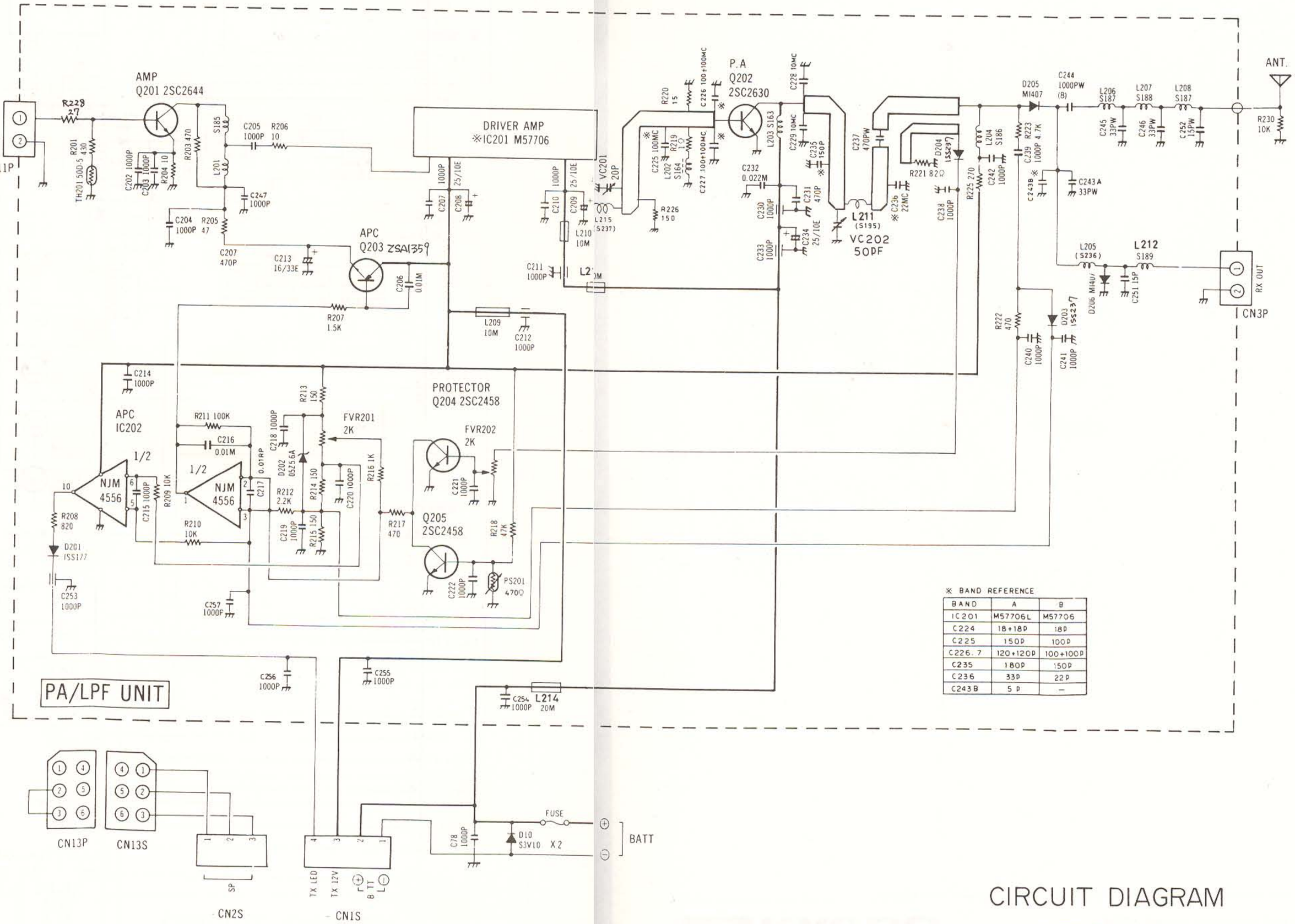

※ BAND REFERENCE

BAND	A	B
IC201	M57706L	M57706
C224	18+18P	18P
C225	150P	100P
C226. 7	120+120P	100+100P
C235	180P	150P
C236	33P	22P
C243B	5 P	—

CIRCUIT DIAGRAM
VHF PA UNIT

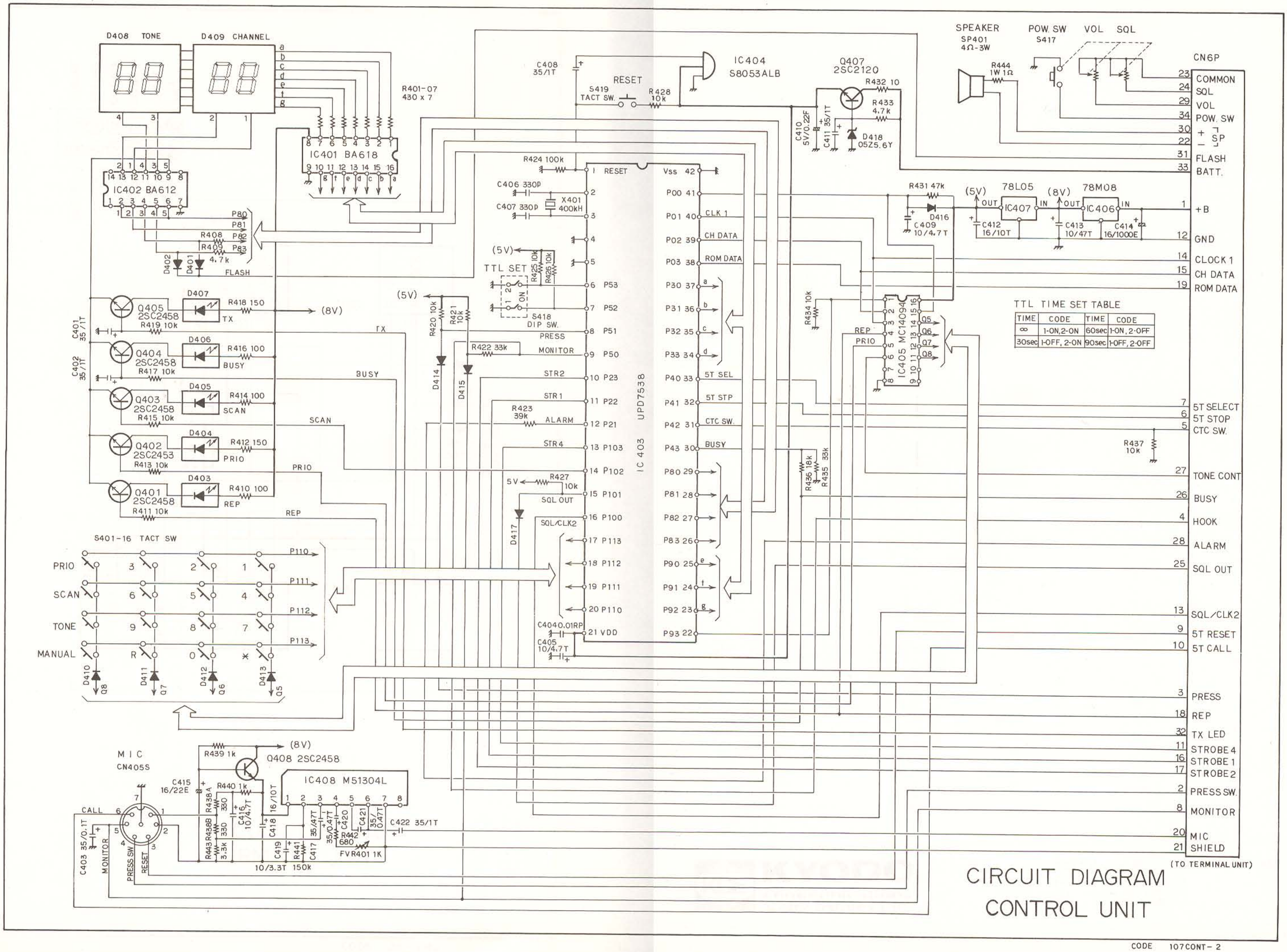

CIRCUIT DIAGRAM
CONTROL UNIT

CODE 107CONT-2

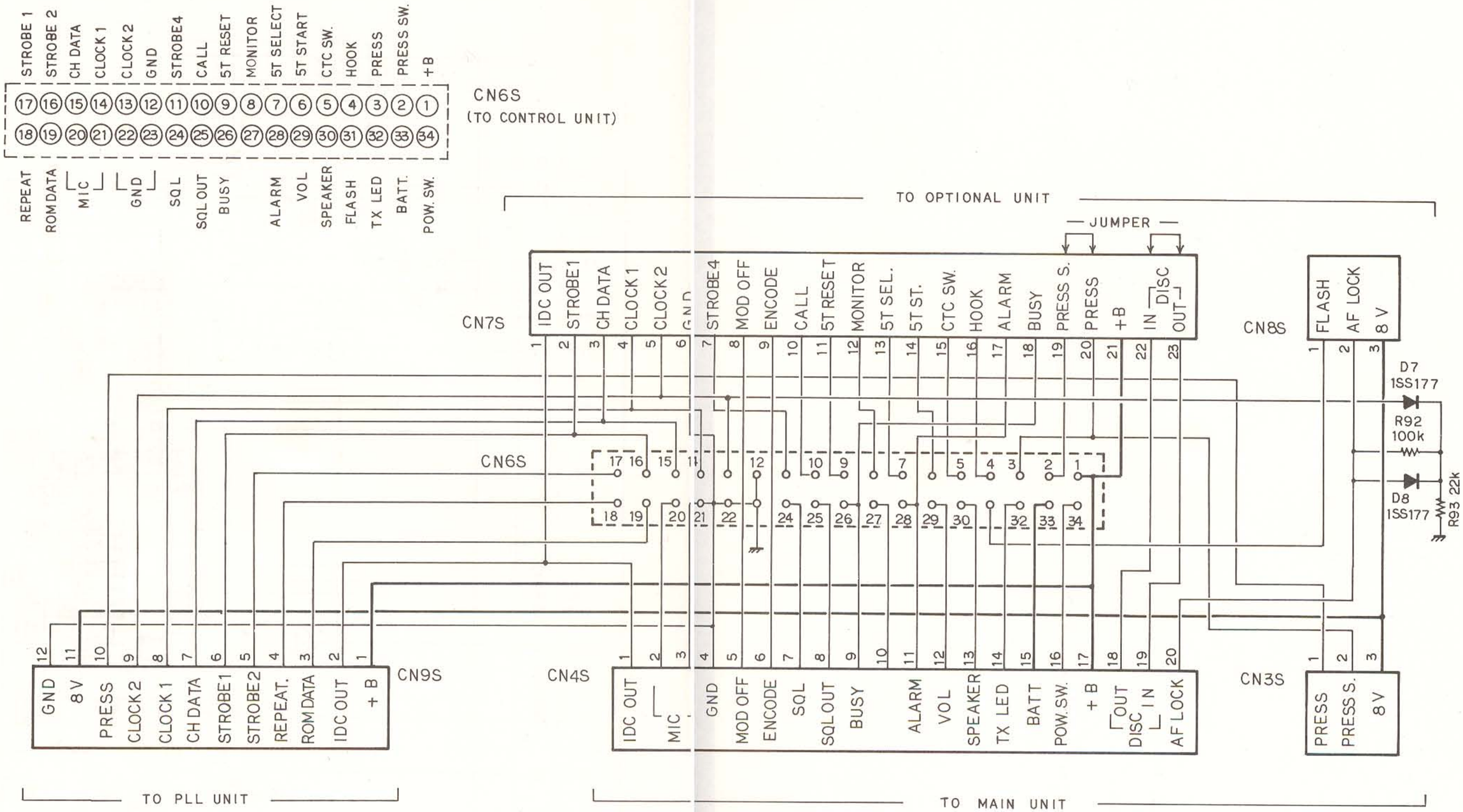

CIRCUIT DIAGRAM
TERMINAL UNIT

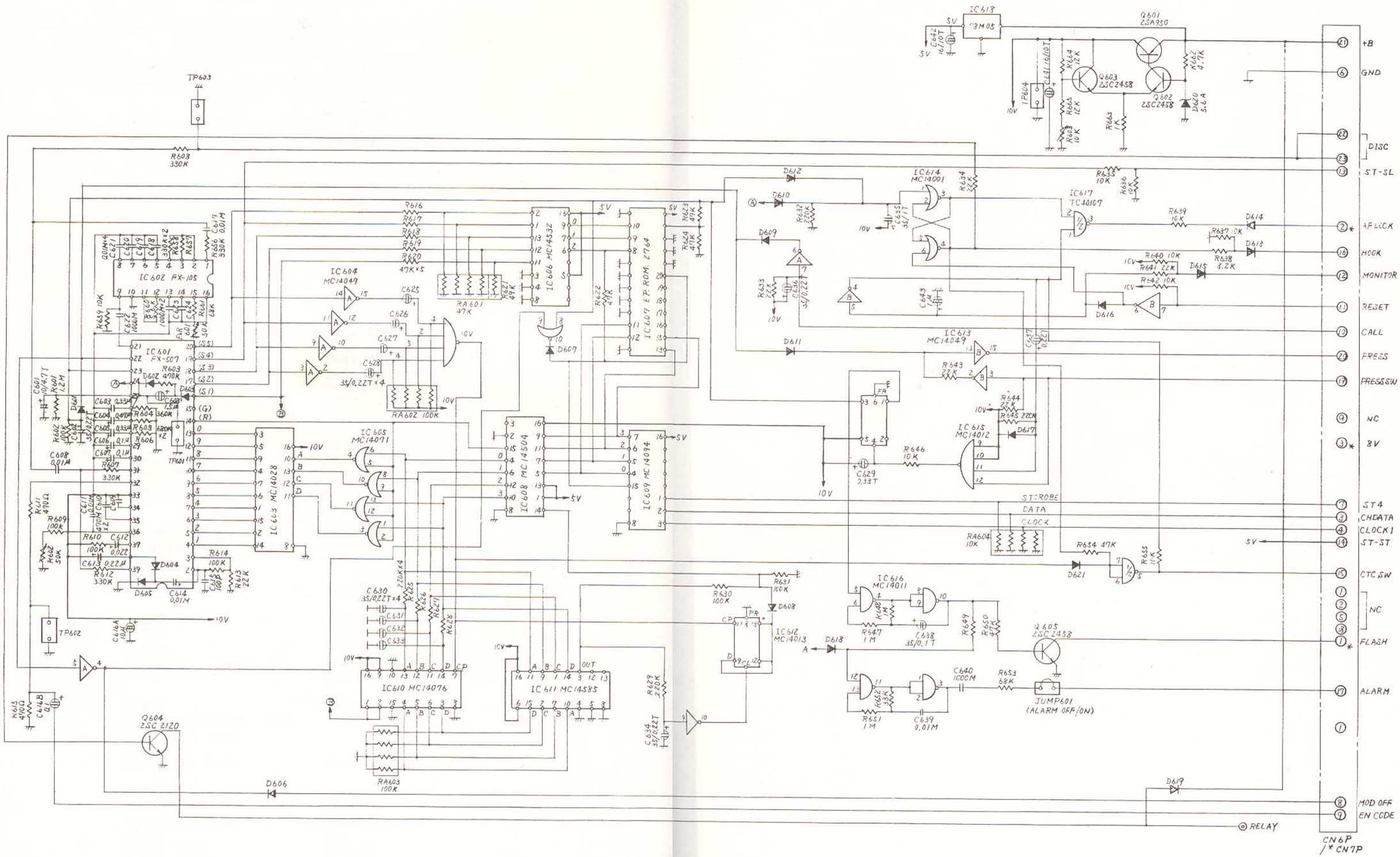

CIRCUIT DIAGRAM FOR 07-5T(A) 5-TONE ENC/DEC UNIT

CODE : 07 5TA