SRA SVENSKA RADIO AB

Godkänd - Approved	Scale	Reg.	Spec.	No.	Sheet
				R4-159481	

Radiostation C-502, -504
Stationsenhet, Mottagare
HF-MF-LF-ENHET
Kretsschema

VHF-Radiotelephone C-502, -504
Station Unit, Receiver
RF-IF-AF-UNIT
Circuit Diagram

UKW-Funksprechgerät C-502, -504
Stationseinheit, Empfänger
HF-ZF-NF-EINHEIT
Schaltbild

Station radio C-502, -504
Unité de station, Récepteur
UNITE HF-FI-BF
Schéma des circuits

Kop. R.H. | Kontr. | Normgr. | Uppgl. | Mat.gr. | Kontr.

1 st angle projection

Uppgl. för - Made for

Ersätter - Replaces

Korr. Rev.	
A	11.6.71
B	20.9.72
C	13.3.73
D	73-11-21
E	75-06-26
F	75-09-15
G	79-09-21
G+	79-10-30

18724

Ändra utgåvor

Reprod

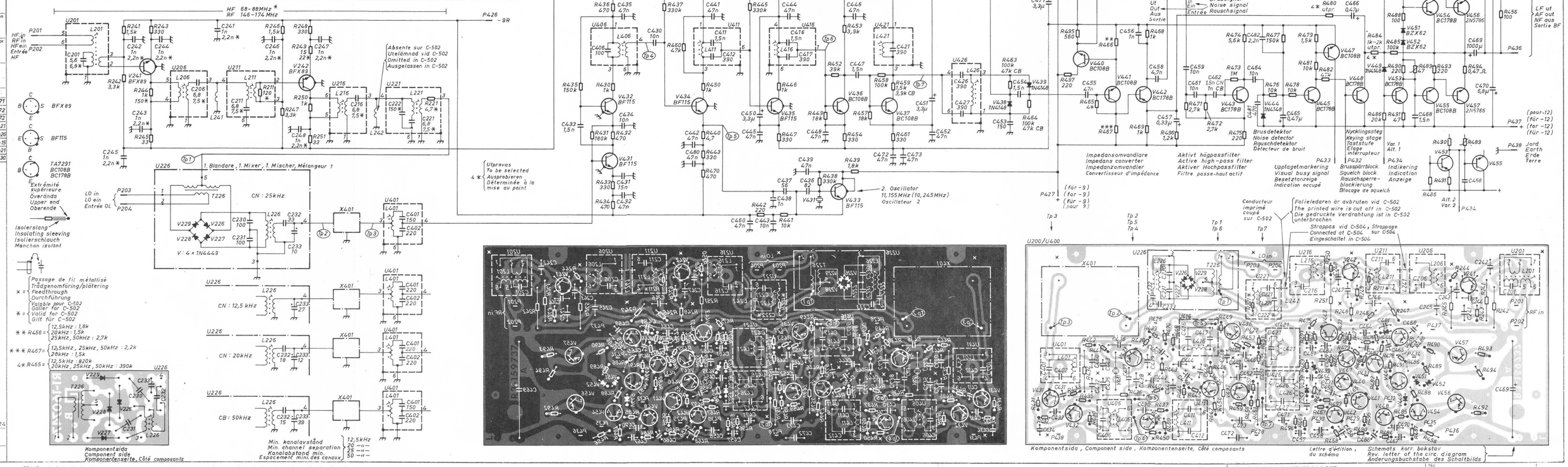

Lettre d'édition, du schéma

Schemats korr. bokstav
Rev. letter of the circ. diagram
Änderungsbuchstabe des Schaltbilds

SRA, Svenska Radio AB, Stockholm, Sweden own the copyright of this document, which is not to be used, changed, copied, reproduced or disseminated in any manner without mutually exchanged written agreement. Trespassing causing harm to SRA will be judicially proceeded against.